CANopen Slave Device
CAN-2026C
Application User's Manual

Warranty

All products manufactured by ICP DAS are under warranty regarding defective materials for a period of one year from the date of delivery to the original purchaser.

Warning

ICP DAS assumes no liability for damages resulting from the use of this product. ICP DAS reserves the right to change this manual at any time without notice. The information furnished by ICP DAS is believed to be accurate and reliable. However, no responsibility is assumed by ICP DAS for its use, or for any infringements of patents or other rights of third parties resulting from its use.

Trademark

The names used for identification only may be registered trademarks of their respective companies.

Table of Contents

1. Introduction

1.1 Overview

CANopen is one kind of the network protocols based on CAN bus and mainly used for embedded system, such as industrial machine control, vehicle control system, factory automation, medical equipments control, remote data acquisition, environment monitoring and package machines control. The CAN-2026C is a CANopen slave which follows the CiA 301 version 4.02 and CiA 401 version 2.1. This module provides 6 analog input channels, 2 analog output channels, 2 digital input channels and 1 digital output channel. Users can obtain those data or configure the CAN-2026C via the standard CANopen protocol. In order to be fully compatible with other CANopen devices, the CAN-2026C has passed the validation of the CiA CANopen Conformance Test tool. Therefore, it is very easy to integrate the CAN-2026C with the standard CANopen master by applying the EDS file. Combining with the CANopen masters of ICP DAS, you can quickly build a CANopen network to approach your requirements.

Figure 1-1 CAN-2026C

1.2 Features

- NMT Slave
- Guarding or Heartbeat Error Control protocols
- Supports Dynamic PDO
- Provide the EDS file
- ESD Protection 4 KV Contact for each channel
- Verifies by the CiA CANopen Conformance Test tool

1.3 Hardware Specifications

CANopen Interface	
Connector	5-pin screwed terminal block (CAN_GND, CAN_L, CAN_SHLD, CAN_H, CAN_V+)
Baud Rate (bps)	10 k, 20 k, 50 k, 125 k, 250 k, 500 k, 800 k, 1 M, selected by rotary switch
Terminator Resistor	DIP switch for the 120 Ω terminator resistor
Protocol	CANopen CiA 301 ver4.02, CiA 401 ver2.1
Node ID	1~99 selected by rotary switch
NMT	Slave
Error Control	Node Guarding protocol / Heartbeat Producer
SDOs	1 server, 0 client
PDOs	10 RxPDO, 10 TxPDO (Supports dynamic PDO)
PDO Modes	Event-triggered, remotely-requested, synchronous (cyclic), synchronous (acyclic)
Emergency Message	Yes
EDS file	Yes
Analog Input	
Channels	6 (Differential)
Input Type	+/-150mV, +/-500 mV, +/-1V, +/-5 V, +/-10 V, +/-20 mA (External 125Ω resistor required)
Sampling Rate	60 Samples/Sec. (Total)
Zero Drift	+/-10 uV/°C
Span Drift	+/-25 ppm/ °C
Accuracy	+/-0.1% of FSR
Common Mode Rejection	86 dB Min.
Normal Mode Rejection	100 dB
Resolution	16-bit
Over voltage protection	240 Vrms
Individual channel configure	Yes
Analog Output	
Channels	2
Output Type	+0V ~ +5V, +/-5V, +0 V ~ +10V,+/-10V
Resolution	12-bit
Accuracy	+/-0.1% of FSR
Voltage Output Capability	10 V @ 20 mA
Current Load Resistance	500 Ω

Power-on value	Yes
Safe value	Yes

Digital Input

Channels	2
Input Type	Wet contact (Sink)
On Voltage Level	+3.5 VDC ~ 30 VDC
Off Voltage Level	+1 VDC Max.
Input Impedance	10 KΩ, 0.66W
Over voltage protection	70 VDC

Digital Output

Channels	1
Output Type	Isolated Open Collector (Sink)
Max Load current	700 mA/channel Max.
Load Voltage	+3.5 VDC ~ +50 VDC
Over voltage protection	60 VDC
Overload protection	Yes
Short Circuit protection	Yes
Power-on value	Yes, Programmable
Safe value	Yes, Programmable

Hardware

ESD Protection	Contact 4 kV class A

LED

CANopen Status	3 LEDs to PWR, RUN and ERR
Terminal Resister	1 LED to terminal resister indicator

Power

Power Supply	Unregulated +10 ~ +30 VDC
Power Consumption	1.8 W

Mechanism

Installation	DIN-Rail
Dimensions	33 mm x 99 mm x 78 mm (W x L x H)

Environment

Operating Temp.	-25 ~ 75 ℃
Storage Temp.	-30 ~ 80 ℃
Humidity	10 ~ 90% RH, non-condensing

1.4 Application

- Measuring Temperature
- Medical technology
- Utility vehicles

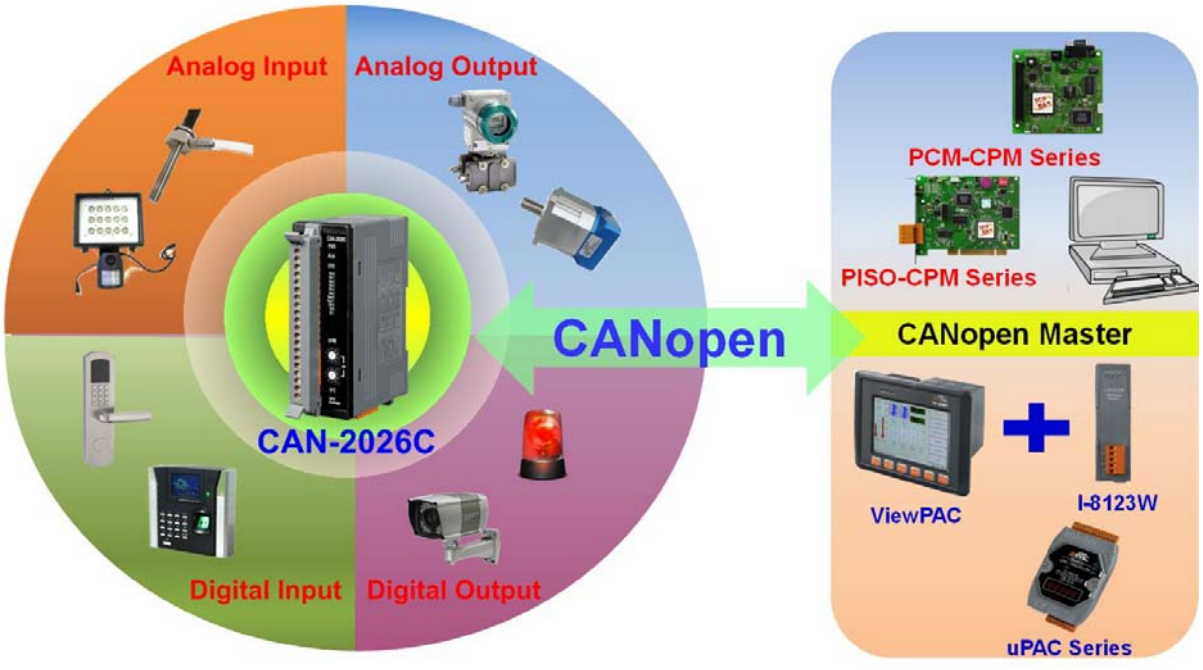

2. Hardware

2.1 Structure

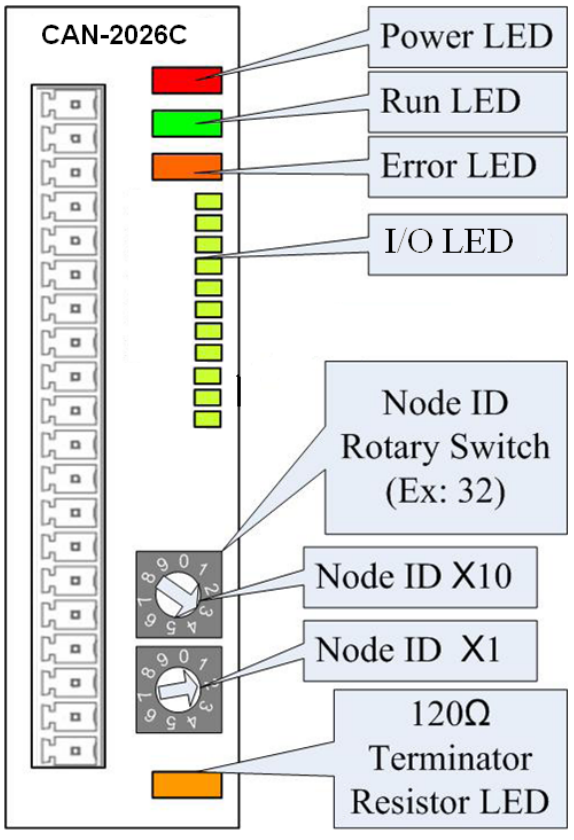

(Top View)

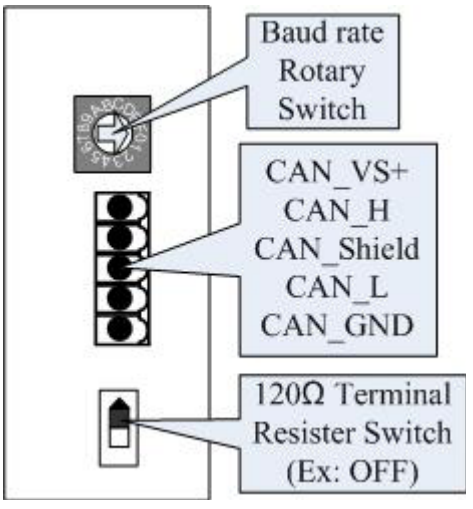

(Botton View)

2.2 Node ID & Baud Rate Rotary Switch

The rotary switches for node ID configure the node ID of the CAN-2026C module. These two switches are for the tens digit and the units digit of node ID. The node ID value of this demo picture is 32.

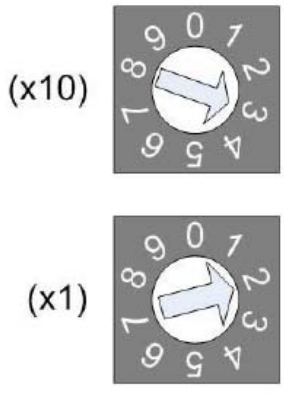

Node ID rotary switch

The rotary switch for baud rate handles the CAN baud rate of the CAN-2026C module. The relationship between the rotary switch value and the practical baud rate is presented in the following table.

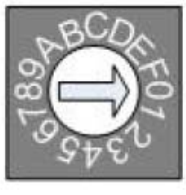

Baud rate rotary switch

Rotary Switch Value	Baud rate (k BPS)
0	10
1	20
2	50
3	125
4	250
5	500
6	800
7	1000

Baud rate and rotary switch

2.3 LED Description

Power LED

The CAN-2026C needs a 10V~30VDC power supply. Under a normal connection, a good power supply and a correct voltage selection, as the unit it turned on, the LED will light up in red.

Run LED

The Run LED indicates the CANopen operation state. The description of the LED state is shown below. About the details, please refer to the section 2.3.1 of the CAN-2000C user manual.

LED Signal	State	Description
No Light	Non-power	Power Supply is not ready
Single Flash	Stopped	The device is in Stopped state
Blinking	Pre-operation	The device is in the pre-operation state
Continuing Light	Operation	The device is in the operational state

Error LED

The Error LED indicates the CANopen error state. The description of the LED state is shown below. About the details, please refer to the section 2.3.2 of the CAN-2000C user manual.

LED Signal	State	Description
No Light	Non error	Device is in working condition
Single Flash	Error Warning	At least one error of the CAN controller has occurred
Blinking	Guarding fail	Guard event happened
Continuing Light	Bus Off	The CAN controller is bus off

Terminal Resistor LED

When the switch of the 120Ω terminal resistor is turned on, the terminal resistor LED will be lightening.

2.4 PIN Assignment

Terminal No.	Pin Assignment
01	Vin0+
02	Vin0-
03	Vin1+
04	Vin1-
05	Vin2+
06	Vin2-
07	Vin3+
08	Vin3-
09	Vin4+
10	Vin4-
11	Vin5+
12	Vin5-
13	Vout0+
14	Vout0-
15	Vout1+
16	Vout1-
17	DO0
18	DI0
19	DI1
20	COM

2.5 Wire Connection

Voltage Input		
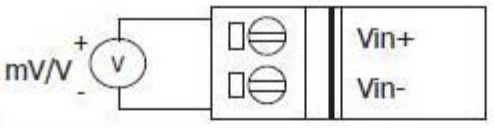		
Current Input		
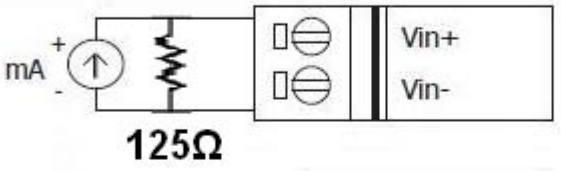		
Voltage Output		
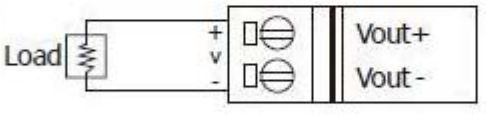		
Digital Input/ Counter	**ON State Readback as 1**	**OFF State Readback as 0**
Wet Contact (Sink)	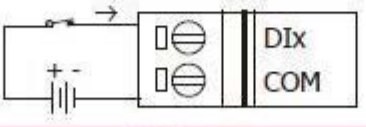	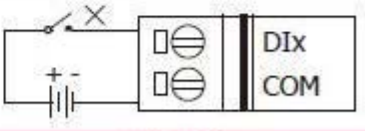
Digital Output	**ON State Readback as 1**	**OFF State Readback as 0**
Open Collector (Sink)	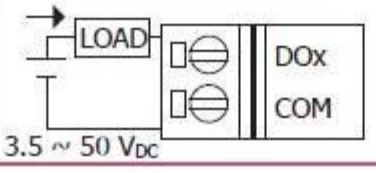	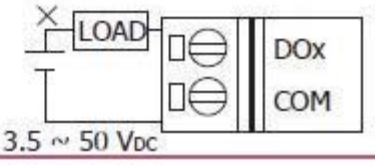

3. Application

3.1 Object Dictionary

General Communication Entries

Idx	Sidx	Description	Type	Attr	Default
1000h	0h	device type	UNSIGNED 32	RO	---
1001h	0h	error register	UNSIGNED 8	RO	---
1003h	0h	largest sub-index supported for “predefine error field”	UNSIGNED 8	RO	0h
	1h	actual error (the newest one)	UNSIGNED 32	RO	---
	…	…	…	…	---
	5h	actual error (the oldest one)	UNSIGNED 32	RO	---
1005h	0h	COB-ID of Sync message	UNSIGNED 32	RW	80h
1008h	0h	manufacturer device name	VISIBLE_STRING	RO	
1009h	0h	manufacturer hardware version	VISIBLE_STRING	RO	---
100Ah	0h	manufacturer software version	VISIBLE_STRING	RO	---
100Ch	0h	guard time	UNSIGNED 16	RW	0
100Dh	0h	life time factor	UNSIGNED 8	RW	0
1010h	0h	largest subindex supported	UNSIGNED 8	RO	1
1010h	1h	save all parameters	UNSIGNED 32	RW	0
1011h	0h	largest subindex supported	UNSIGNED 8	RO	1
1011h	1h	restore all default parameters	UNSIGNED 32	RW	0
1014h	0h	COB-ID of EMCY	UNSIGNED 32	RW	80h+Node-ID
1015h	0h	Inhibit time of EMCY	UNSIGNED 16	RW	0
1017h	0h	Heartbeat time	UNSIGNED 16	RW	0
1018h	0h	largest sub-index supported for “identity object”	UNSIGNED 8	RO	4
	1h	vender ID	UNSIGNED 32	RO	0x0000013C
	2h	Produce Code	UNSIGNED 32	RO	0x00002026
	3h	Revision_number	UNSIGNED 32	RO	0x00030001
	4h	Serial_number	UNSIGNED 32	RO	0x6cd3683c

SDO Communication Entries

Idx	Sidx	Description	Type	Attr	Default
1200h	0h	largest sub-index supported for “server SDO parameter”	UNSIGNED 8	RO	2
	1h	COB-ID form client to server (RxSDO)	UNSIGNED 32	RO	600h+Node-ID
	2h	COB-ID form server to client (TxSDO)	UNSIGNED 32	RO	580h+Node-ID

RxPDO Communication Entries

Idx	Sidx	Description	Type	Attr	Default
1400h	0h	Number of entries	UNSIGNED 8	RO	2
	1h	COB-ID used by RxPDO	UNSIGNED 32	RW	200h+Node-ID
	2h	Transmission type	UNSIGNED 8	RW	FFh
1401h	0h	Number of entries	UNSIGNED 8	RO	2
	1h	COB-ID used by RxPDO	UNSIGNED 32	RW	300h+Node-ID
	2h	Transmission type	UNSIGNED 8	RW	FFh
1402h	0h	Number of entries”	UNSIGNED 8	RO	2
	1h	COB-ID used by RxPDO	UNSIGNED 32	RW	400h+Node-ID
	2h	Transmission type	UNSIGNED 8	RW	FFh
1403h	0h	Number of entries	UNSIGNED 8	RO	2
	1h	COB-ID used by RxPDO	UNSIGNED 32	RW	500h+Node-ID
	2h	Transmission type	UNSIGNED 8	RW	FFh
1404h	0h	Number of entries	UNSIGNED 8	RO	2
	1h	COB-ID used by RxPDO	UNSIGNED 32	RW	C0000000h
	2h	Transmission type	UNSIGNED 8	RW	---
…	…	…	…	…	…
1409h	0h	Number of entries	UNSIGNED 8	RO	2
	1h	COB-ID used by RxPDO	UNSIGNED 32	RW	C0000000h
	2h	Transmission type	UNSIGNED 8	RW	---

RxPDO Mapping Communication Entries

Idx	Sidx	Description	Type	Attr	Default
1600h	0h	Number of entries	UNSIGNED 8	RW	1
	1h	Write DO channel 0	UNSIGNED 32	RW	6200 0108h
1601h	0h	Number of entries	UNSIGNED 8	RW	2
	1h	Write AO channel 0	UNSIGNED 16	RW	6411 0110h
	2h	Write AO channel 1	UNSIGNED 16	RW	6411 0210h

1602h	0h	Number of entries	UNSIGNED 8	RW	0
…	…	…	…	…	…
1609h	0h	Number of entries	UNSIGNED 8	RW	0

TxPDO Communication Entries

Idx	Sidx	Description	Type	Attr	Default
1800h	0h	Number of entries	UNSIGNED 8	RO	5
	1h	COB-ID used by TxPDO	UNSIGNED 32	RW	180h+Node-ID
	2h	Transmission type	UNSIGNED 8	RW	FFh
	3h	Inhibit time	UNSIGNED 16	RW	0
	4h	Reversed	---	---	---
	5h	Event timer	UNSIGNED 16	RW	0
1801h	0h	Number of entries	UNSIGNED 8	RO	5
	1h	COB-ID used by TxPDO	UNSIGNED 32	RW	280h+Node-ID
	2h	Transmission type	UNSIGNED 8	RW	FFh
	3h	Inhibit time	UNSIGNED 16	RW	0
	4h	Reversed	---	---	---
	5h	Event timer	UNSIGNED 16	RW	0
1802h	0h	Number of entries	UNSIGNED 8	RO	5
	1h	COB-ID used by TxPDO	UNSIGNED 32	RW	380h+Node-ID
	2h	Transmission type	UNSIGNED 8	RW	FFh
	3h	Inhibit time	UNSIGNED 16	RW	0
	4h	Reversed	---	---	---
	5h	Event timer	UNSIGNED 16	RW	0
1803h	0h	Number of entries	UNSIGNED 8	RO	5
	1h	COB-ID used by TxPDO	UNSIGNED 32	RW	480h+Node-ID
	2h	Transmission type	UNSIGNED 8	RW	FFh
	3h	Inhibit time	UNSIGNED 16	RW	0
	4h	Reversed	---	---	---
	5h	Event timer	UNSIGNED 16	RW	0
1804h	0h	Number of entries	UNSIGNED 8	RO	5
	1h	COB-ID used by TxPDO	UNSIGNED 32	RW	80000000h
	2h	Transmission type	UNSIGNED 8	RW	FFh
	3h	Inhibit time	UNSIGNED 16	RW	0
	4h	Reversed	---	---	---
	5h	Event timer	UNSIGNED 16	RW	0
…	…	…	…	…	…
1809h	0h	Number of entries	UNSIGNED 8	RO	5
	1h	COB-ID used by TxPDO	UNSIGNED 32	RW	80000000h
	2h	Transmission type	UNSIGNED 8	RW	FFh

	3h	Inhibit time	UNSIGNED 16	RW	0
	4h	Reversed	…	…	…
	5h	Event timer	UNSIGNED 16	RW	0

Note: The unit of "Inhibit time" is 100 us.

TxPDO Mapping Communication Entries

Idx	Sidx	Description	Type	Attr	Default
1A00h	0h	Number of entries	UNSIGNED 8	RO	1
	1h	Read Digital input 1h to 2h	UNSIGNED 8	RW	6001 0108h
1A01h	0h	Number of entries	UNSIGNED 8	RO	4
	1h	Read Analog input 1h	UNSIGNED 16	RW	6401 0110h
	2h	Read Analog input 2h	UNSIGNED 16	RW	6401 0210h
	3h	Read Analog input 3h	UNSIGNED 16	RW	6401 0310h
	4h	Read Analog input 4h	UNSIGNED 16	RW	6401 0410h
1A02h	0h	Number of entries	UNSIGNED 8	RO	2
	1h	Read Analog input 5h	UNSIGNED 16	RW	6401 0510h
	2h	Read Analog input 6h	UNSIGNED 16	RW	6401 0610h
1A03h	0h	Number of entries	UNSIGNED 8	RO	0
1A04h	0h	Number of entries	UNSIGNED 8	RO	0
1A05h	0h	Number of entries	UNSIGNED 8	RO	0
…	..	…	…	…	…
1A09h	0h	Number of entries	UNSIGNED 8	RO	0

Analog Input/Output range Entry

Idx	Sidx	Description	Type	Attr	Default
2004h	0h	Number of entries	UNSIGNED 8	RO	8
	1h	Input range of AI channel 0	UNSIGNED 8	RW	8
	…	…	…	…	…
	6h	Input range of AI channel 5	UNSIGNED 8	RW	8
	7h	Output range of AO channel 0	UNSIGNED 8	RW	33
	8h	Output range of AO channel 1	UNSIGNED 8	RW	33

Analog Input Channel Enable/Disable

Idx	Sidx	Description	Type	Attr	Default
2044h	0h	Number of entries	UNSIGNED 8	RO	6
	1h	0: Ch0. Disable, 1: Ch0. Enable	UNSIGNED 8	RW	1
	…	…	…	…	…
	6h	0: Ch5. Disable, 1: Ch5. Enable	UNSIGNED 8	RW	1

Power On Into Operational Mode

Idx	Sidx	Description	Type	Attr	Default
2100h	0h	Number of entries	UNSIGNED 8	RO	1
	1h	0: Pre-Operational Mode at power on 1: Operational Mode at power on	UNSIGNED 8	RW	0

Digital Input Device Entries

Idx	Sidx	Description	Type	Attr	Default
6000h	0h	Number of entries	UNSIGNED 8	RO	1
	1h	Read Digital input 1h to 2h	UNSIGNED 8	RO	--

Digital Output Device Entries

Idx	Sidx	Description	Type	Attr	Default
6200h	0h	Number of entries	UNSIGNED 8	RO	1
	1h	Write Digital output 1h	UNSIGNED 8	RW	-

Analog Input DeviceEntries

Idx	Sidx	Description	Type	Attr	Default
6401h	0h	Number of entries	UNSIGNED 8	RO	6
	1h	Read Analog Input channel 0	UNSIGNED 16	RO	-
	…	…	…	…	…
	6h	Read Analog Input channel 5	UNSIGNED 16	RO	-

Analog Output DeviceEntries

Idx	Sidx	Description	Type	Attr	Default
6411h	0h	Number of entries	UNSIGNED 8	RO	2
	1h	Write Analog Output channel 0	UNSIGNED 16	RW	--
	2h	Write Analog Output channel 1	UNSIGNED 16	RW	--

Analog Input Interrupt Upper Limit Integer

Idx	Sidx	Description	Type	Attr	Default
6424h	0h	Number of entries	UNSIGNED 8	RO	6
	1h	AI upper limit of channel 0	UNSIGNED 32	RW	---
	…	…	…	…	…
	6h	AI upper limit of channel 5	UNSIGNED 32	RW	---

Note: Please refer to “Appendix” for AI upper limit range

Analog Input Interrupt Lower Limit Interger

Idx	Sidx	Description	Type	Attr	Default

6425h	0h	Number of entries	UNSIGNED 8	RO	6
	1h	AI lower limit of channel 0	UNSIGNED 32	RW	---
	…	…	…	…	…
	6h	AI lower limit of channel 5	UNSIGNED 32	RW	---

Note: Please refer to "Appendix" for AI lower limit range

Analog Input Interrupt Delta Unsigned

Idx	Sidx	Description	Type	Attr	Default
6426h	0h	Number of entries	UNSIGNED 8	RO	6
	1h	AI delta value of channel 0	UNSIGNED 32	RW	---
	…	…	…	…	…
	6h	AI delta value of channel 5	UNSIGNED 32	RW	---

Note: These values are used to define the acceptable AI change ranges for each AI channels and may have different range for the physical value because of the settings of the type code. Please refer to the appendix or the type code definition.

3.2 Store and Restore Object

The user can write the value 65766173h to object with index 1010h and subindex 1 to save the application setting, or write the value 64616F6Ch to the object with index 1011h and subindex 1 and reboot the module to load the factory default. The following table lists the relative objects which will be stored or restored after writing these two objects. The factory default for these objects is also shown below:

Index	Subindex	Description	Factory Default
2004h	1~6	Analog Input type code for channel 0 ~ 5	08h
2044h	1~6	Analog Input Enable/Disable Channel	1
2100h	1	Set Module to Operation Mode when powering on	0
6421h	1~6	AI interrupt trigger selections for channel 0~5	07h
6423h	1	AI global interrupt enable	0
6424h	1~6	AI interrupt upper limit for channel 0~5	--
6425h	1~6	AI interrupt lower limit for channel 0~5	--
6426h	1~6	AI interrupt delta values for channel 0~5	--
1400h	1~2	RxPDO1 parameter	--
...	...	...	...
1409h	1~2	RxPDO10 parameter	--
1600h	0~8	RxPDO1 mapping information	--
...	...	...	…
1609h	0~8	RxPDO10 mapping information	--
1800h	1~5	TxPDO1 parameter	--
...	...	...	...
1809h	1~5	TxPDO10 parameter	--
1A00h	0~8	TxPDO1 mapping information	--
...	...	...	…
1A09h	0~8	TxPDO10 mapping information	--

3.3 Application Object

Type code of CAN-2026C module (0x2004)

The user can read the object with index 6401h and subindex 1~6 to get the AI value of the channel 0~6, and the range for each AI type code are listed in Appendix. If the user wants to change the AI input type, write the type code to the object with index 2004h and subindex 1~6. For example, if the node ID of CAN-2026C is 1, the following command would be used:

11-bit COB-ID (bit)											RTR	Data Length	8-byte Data (byte)							
Func Code				Node ID																
10	9	8	7	6	5	4	3	2	1	0			0	1	2	3	4	5	6	7
1	1	0	0	0	0	0	0	0	0	1	0	8	2F	04	20	01	09	00	00	00

ID(hex)	RTR	DLC	D1	D2	D3	D4	D5	D6	D7	D8
601	0	8	2F	04	20	01	09	00	00	00

SDO client → **SDO server (CAN-2026C)**

11-bit COB-ID (bit)											RTR	Data Length	8-byte Data (byte)							
Func Code				Node ID																
10	9	8	7	6	5	4	3	2	1	0			0	1	2	3	4	5	6	7
1	0	1	1	0	0	0	0	0	0	1	0	8	60	04	20	01	00	00	00	00

ID(hex)	RTR	DLC	D1	D2	D3	D4	D5	D6	D7	D8
581	0	8	60	04	20	01	00	00	00	00

SDO client ← **SDO server (CAN-2026C)**

Analogue Input module (0x6401)

Writing object with index 2004h and subindex 1 with 9h means to change the type code of the AI channel 0 with 9h.

11-bit COB-ID (bit)											RTR	Data Length	8-byte Data (byte)							
Func Code				Node ID																
10	9	8	7	6	5	4	3	2	1	0			0	1	2	3	4	5	6	7
1	1	0	0	0	0	0	0	0	0	1	0	8	40	01	64	01	00	00	00	00

ID(hex)	RTR	DLC	D1	D2	D3	D4	D5	D6	D7	D8
601	0	8	40	01	64	01	00	00	00	00

SDO client → **SDO server (CAN-2026C)**

11-bit COB-ID (bit)											RTR	Data Length	8-byte Data (byte)							
Func Code				Node ID																
10	9	8	7	6	5	4	3	2	1	0			0	1	2	3	4	5	6	7
1	0	1	1	0	0	0	0	0	0	1	0	8	4B	01	64	01	FF	3F	00	00

ID(hex)	RTR	DLC	D1	D2	D3	D4	D5	D6	D7	D8
581	0	8	4B	01	64	01	00	00	FF	FF

SDO client ← **SDO server (CAN-2026C)**

Reading object with index 6401h and subindex 1 means to get the value of the AI channel 0. According to the type code 9h set before, the replied value of the AI channel 0 is 3FFFh.

Analogue Output module (0x6411)

User can use the object index 0x6411 with subindex 1 to read a group of 16-bit information. For example, if the node ID of the CAN-2026C is 1, the commands are listed as below:

11-bit COB-ID (bit)											RTR	Data Length	8-byte Data (byte)							
Func Code				Node ID																
10	9	8	7	6	5	4	3	2	1	0			0	1	2	3	4	5	6	7
1	1	0	0	0	0	0	0	0	0	1	0	8	40	11	64	01	00	00	00	00

ID(hex)	RTR	DLC	D1	D2	D3	D4	D5	D6	D7	D8
601	0	8	40	11	64	01	00	00	00	00

SDO client → **SDO server (CAN-2026C)**

11-bit COB-ID (bit)											RTR	Data Length	8-byte Data (byte)							
Func Code				Node ID																
10	9	8	7	6	5	4	3	2	1	0			0	1	2	3	4	5	6	7
1	0	1	1	0	0	0	0	0	0	1	0	5	4B	11	64	01	FF	03	---	---

ID(hex)	RTR	DLC	D1	D2	D3	D4	D5	D6	D7	D8
581	0	8	4B	11	64	01	FF	03	00	00

SDO client ← **SDO server (CAN-2026C)**

Read the object index 0x6411 with subindex 1, and the value 0x3FFF of the AO channel 0 will be responded by CAN-2026C module. User can use the object index 0x6411 with subindex 1 to write output value (Hex format) into CAN-2026C module. The commands are as follows.

11-bit COB-ID (bit)											RTR	Data Length	8-byte Data (byte)							
Func Code				Node ID																
10	9	8	7	6	5	4	3	2	1	0			0	1	2	3	4	5	6	7
1	1	0	0	0	0	0	0	0	0	1	0	8	2B	11	64	01	00	08	00	00

ID(hex)	RTR	DLC	D1	D2	D3	D4	D5	D6	D7	D8
601	0	8	2B	11	64	01	00	08	00	00

SDO client → **SDO server (CAN-2026C)**

11-bit COB-ID (bit)											RTR	Data Length	8-byte Data (byte)							
Func Code				Node ID																
10	9	8	7	6	5	4	3	2	1	0			0	1	2	3	4	5	6	7
1	0	1	1	0	0	0	0	0	0	1	0	4	60	11	64	01	---	---	---	---

ID(hex)	RTR	DLC	D1	D2	D3	D4	D5	D6	D7	D8
581	0	8	60	11	64	01	00	00	00	00

SDO client ← **SDO server (CAN-2026C)**

Write the 0x0800 value into the object index 0x6411 with subindex 1 of CAN-2026C, and the AO channel 0 will output the 5V if you select the 0~10 V output range.

Analogue Output Error Mode (0x6443)

This object defines whether an output is set to a pre-defined error value (see 6444h object) in case of an internal device failure or a 'Stop remote node' indication.
0 = actual value rest.
1 = reverts to error value integer (6444h).
others= reserved.

For example, if the node ID of the CAN-2026C is 1, the commands are as follows:

11-bit COB-ID (bit)											RTR	Data Length	8-byte Data (byte)							
Func Code				Node ID																
10	9	8	7	6	5	4	3	2	1	0			0	1	2	3	4	5	6	7
1	1	0	0	0	0	0	0	0	0	1	0	8	2F	43	64	01	01	00	00	00

ID(hex)	RTR	DLC	D1	D2	D3	D4	D5	D6	D7	D8
601	0	8	2F	43	64	01	01	00	00	00

SDO client → **SDO server (CAN-2026C)**

11-bit COB-ID (bit)											RTR	Data Length	8-byte Data (byte)							
Func Code				Node ID																
10	9	8	7	6	5	4	3	2	1	0			0	1	2	3	4	5	6	7
1	0	1	1	0	0	0	0	0	0	1	0	4	60	43	64	01	---	---	---	---

ID(hex)	RTR	DLC	D1	D2	D3	D4	D5	D6	D7	D8
581	0	8	60	43	64	01	00	00	00	00

SDO client ← **SDO server (CAN-2026C)**

Write object index 0x6443 with subindex 1 to subindex 2, which can set each channel for actual value rest mode or reverts to error value integer mode.

Analogue Output Error Value Interger (0x6444)

On condition that the corresponding Error Mode is active, device failures will set the outputs to the value configured by this object (index = 0x6444).

For example, if the node ID of CAN-2026C is 1, the commands are shown below:

11-bit COB-ID (bit)											RTR	Data Length	8-byte Data (byte)							
Func Code				Node ID																
10	9	8	7	6	5	4	3	2	1	0			0	1	2	3	4	5	6	7
1	1	0	0	0	0	0	0	0	0	1	0	8	23	44	64	01	FF	03	00	00

ID(hex)	RTR	DLC	D1	D2	D3	D4	D5	D6	D7	D8
601	0	8	2B	44	64	01	FF	03	00	00

SDO client → **SDO server (CAN-2026C)**

11-bit COB-ID (bit)											RTR	Data Length	8-byte Data (byte)							
Func Code				Node ID																
10	9	8	7	6	5	4	3	2	1	0			0	1	2	3	4	5	6	7
1	0	1	1	0	0	0	0	0	0	1	0	4	60	44	64	01	---	---	---	---

ID(hex)	RTR	DLC	D1	D2	D3	D4	D5	D6	D7	D8
581	0	8	60	44	64	01	00	00	00	00

SDO client ← **SDO server (CAN-2026C)**

Write the output value 0x03FF into the object index 0x6444 with subindex 1. The CAN-2026C responds that it is successful.

Error Mode and Error Value (0x6443, 0x6444)

The object 0x6443 and 0x6444 are used to control the safe value when the CAN-2026C is into stop mode or some error happens, such as node guarding failure, it will check the value of the object 0x6443. If some bits of the subindex 1 of this object are set to 1, the corresponding AO channels will output the error mode output values which are described in the corresponding subindex of the object 0x6444.

For example, if set the value 1 into the object of 0x6443 with subindex 1 and a value 0x3FFF into the object 0x6444 with subindex 1 respectively, when some error event occurs, only the channel 0 will output the error mode output value 0x3FFF because the index 0x6443 with subindex 1 is set to 1. The others channels keeps the status as the error event is not happened.

11-bit COB-ID (bit)											RTR	Data Length	8-byte Data (byte)							
Func Code				Node ID																
10	9	8	7	6	5	4	3	2	1	0			0	1	2	3	4	5	6	7
1	1	0	0	0	0	0	0	0	0	1	0	8	2F	43	64	01	01	00	00	00

ID(hex)	RTR	DLC	D1	D2	D3	D4	D5	D6	D7	D8
601	0	8	2F	43	64	01	01	00	00	00

SDO client → **SDO server (CAN-2026C)**

11-bit COB-ID (bit)											RTR	Data Length	8-byte Data (byte)							
Func Code				Node ID																
10	9	8	7	6	5	4	3	2	1	0			0	1	2	3	4	5	6	7
1	0	1	1	0	0	0	0	0	0	1	0	8	60	43	64	01	---	---	---	---

ID(hex)	RTR	DLC	D1	D2	D3	D4	D5	D6	D7	D8
581	0	8	60	43	64	01	00	00	00	00

SDO client ← **SDO server (CAN-2026C)**

11-bit COB-ID (bit)											RTR	Data Length	8-byte Data (byte)							
Func Code				Node ID																
10	9	8	7	6	5	4	3	2	1	0			0	1	2	3	4	5	6	7
1	1	0	0	0	0	0	0	0	0	1	0	8	23	44	64	01	FF	03	00	00

ID(hex)	RTR	DLC	D1	D2	D3	D4	D5	D6	D7	D8
601	0	8	2B	44	64	01	FF	03	00	00

SDO client → **SDO server (CAN-2026C)**

Write object index 0x6443 and subindex 1 to 0x01 means that setting the error mode to 0x01 for enabling the error mode output of channel 0.

11-bit COB-ID (bit)											RTR	Data Length	8-byte Data (byte)							
Func Code				Node ID																
10	9	8	7	6	5	4	3	2	1	0			0	1	2	3	4	5	6	7
1	0	1	1	0	0	0	0	0	0	1	0	8	60	44	64	01	---	---	---	---

ID(hex)	RTR	DLC	D1	D2	D3	D4	D5	D6	D7	D8
581	0	8	60	44	64	01	00	00	00	00

SDO client ← **SDO server (CAN-2026C)**

Write object index 0x6444 and subindex 1 to 0x03FF means that setting the error value to 0x03FF for activating the error mode output value of channel 0. If the error event occurs, the module will output the safe value 0x03FF corresponding the object 0x6443 and 0x6444.

Set Module to Operation Mode when powering on (0x2100)

This object 0x2100 with subindex 1 defines if the module will enter operation mode automatically when powering on.

For example, if the node id of CAN-2026C is 1, the commands are as below:

11-bit COB-ID (bit)											RTR	Data Length	8-byte Data (byte)							
Func Code				Node ID																
10	9	8	7	6	5	4	3	2	1	0			0	1	2	3	4	5	6	7
1	1	0	0	0	0	0	0	0	0	1	0	8	2F	00	21	01	01	00	00	00

ID(hex)	RTR	DLC	D1	D2	D3	D4	D5	D6	D7	D8
601	0	8	2F	00	21	01	01	00	00	00

SDO client → **SDO server (CAN-2015C)**

11-bit COB-ID (bit)											RTR	Data Length	8-byte Data (byte)							
Func Code				Node ID																
10	9	8	7	6	5	4	3	2	1	0			0	1	2	3	4	5	6	7
1	0	1	1	0	0	0	0	0	0	1	0	8	60	00	21	01	--	--	--	--

ID(hex)	RTR	DLC	D1	D2	D3	D4	D5	D6	D7	D8
581	0	8	60	00	21	01	00	00	00	00

SDO client ← **SDO server (CAN-2015C)**

Write object index 0x2100 with subindex 1 to 0x01 then store the setting as below. Module will enter operation mode when powering on.

11-bit COB-ID (bit)											RTR	Data Length	8-byte Data (byte)							
Func Code				Node ID																
10	9	8	7	6	5	4	3	2	1	0			0	1	2	3	4	5	6	7
1	1	0	0	0	0	0	0	0	0	1	0	8	23	10	10	01	73	61	76	65

ID(hex)	RTR	DLC	D1	D2	D3	D4	D5	D6	D7	D8
601	0	8	23	10	10	01	73	61	76	65

SDO client → **SDO server (CAN-2015C)**

11-bit COB-ID (bit)											RTR	Data Length	8-byte Data (byte)							
Func Code				Node ID																
10	9	8	7	6	5	4	3	2	1	0			0	1	2	3	4	5	6	7
1	0	1	1	0	0	0	0	0	0	1	0	8	60	10	10	01	--	--	--	--

ID(hex)	RTR	DLC	D1	D2	D3	D4	D5	D6	D7	D8
581	0	8	60	10	10	01	00	00	00	00

SDO client ← **SDO server (CAN-2015C)**

3.4 Default PDO Mapping

RxPDO mapping list:

ID	Len	D0	D1	D2	D3	D4	D5	D6	D7
200h+x	0	Reserved							
300h+x	0	AO_ C0_L	AO_ C0_H	AO_ C1_L	AO_ C1_H	--	--	--	-
400h+x	0	Reserved							
500h+x	0	Reserved							

Note: x is Node-ID of the module

Note: AO is Analogue Output

Note: C0, C1, C2 and C3 is channel 0, channel 1, channel 2 and channel 3.

Note: The 'L' indicates low byte and 'H' indicates high byte.

TxPDO mapping list:

ID	Led	D0	D1	D2	D3	D4	D5	D6	D7
180h+x	0	Reserved							
280h+x	8	AI ch0		AI ch1		AI ch2		AI ch3	
380h+x	4	AI ch4		AI ch5		--		--	
480h+x	0	Reserved							

3.5 EMCY Communication

The data format of the emergency object data follows the structure below.

Byte	0	1	2	3	4	5	6	7
Content	Emergency Error code		Error register	Manufacturer specific Error Field				

Each bit on the error register is defined as follows.

Bit	Meaning
0	Generic error
1	Current
2	Voltage
3	Temperature
4	Communication error (Overrun, error state)
5	Device profile specific
6	Reserved (Always 0)
7	Manufacturer specific

The Emergency error codes and the error register are specified in the following table.

Emergency Error Code		Error Register	Manufacture Specific Error Field		Description
High Byte	Low Byte		First Byte	Last Four Bytes	
00	00	00	00	00 00 00 00	Error Reset or No Error
10	00	81	01	00 00 00 00	CAN controller Error Occur
50	00	81	02	00 00 00 00	EEPROM Access Error
81	01	11	04	00 00 00 00	Soft Rx Buffer Overrun
81	01	11	05	00 00 00 00	Soft Tx Buffer Overrun
81	01	11	06	00 00 00 00	CAN controller Overrun
81	30	11	07	00 00 00 00	Lift Guarding Fail

81	40	11	08	00 00 00 00		Recover From Bus Off
82	10	11	09	00 00 00 00		PDO Data Length Error
FF	00	80	0A	00 00 00 00		Request To Reset Node or Communication
FF	00	2E	0B	00 00 Upper limit alarm	00 00 Lower limit alarm	Upper/Lower limit alarm for Each channel

Appendix: Type Code Definition

Analog Input Type code Definition for CAN-2026C

Type Code	Input Type	Data Format	Max Value	Min Value
08 (Default)	-10 to +10V	Engineer Unit	+10.000	-10.000
		% of FSR	+100.00	-100.00
		2's complement HEX	7FFF	8000
09	-5 to +5V	Engineer Unit	+5.0000	-5.0000
		% of FSR	+100.00	-100.00
		2's complement HEX	7FFF	8000
0A	-1 to +1V	Engineer Unit	+1.0000	-1.0000
		% of FSR	+100.00	-100.00
		2's complement HEX	7FFF	8000
0B	-500 to +500mV	Engineer Unit	+500.00	-500.00
		% of FSR	+100.00	-100.00
		2's complement HEX	7FFF	8000
0C	-150 to +150mV	Engineer Unit	+150.00	-150.00
		% of FSR	+100.00	-100.00
		2's complement HEX	7FFF	8000
0D	-20 to +20mA (with 125Ω resistor)	Engineer Unit	+20.000	-20.000
		% of FSR	+100.00	-100.00
		2's complement HEX	7FFF	8000

Analog Output Type code Definition for CAN-2026C

Type Code	Output Type	Data Format	Max Value	Min Value
32	0V to 10V	Engineer Unit	+10.00	+0.00
		2's complement HEX	FFF	000
33 (Default)	-10V to 10V	Engineer Unit	+10.00	-10.00
		2's complement HEX	7FF	800
34	0V to 5V	Engineer Unit	+5.00	+0.00
		2's complement HEX	FFF	000
35	-5V to 5V	Engineer Unit	+5.00	-5.00
		2's complement HEX	7FF	800